BX 88266
Class IV
Bolt On Universal Adapter

Installation Instructions

NOTE: Installation requires drilling 17/32” holes in the bumper.

PARTS LIST

Ref #	Qty.	Part #	Description
1	2	61-6939	BX88266 Adapter Plate Weldment
2	2	102-7248	BX88266 Adapter Plate
3	8	201-0153	1/2”-13 x 2-1/2” Hex Bolt, Grd. 5
4	8	201-0377	1/2”-13 X 5-1/2” Hex Bolt, Grd. 5
5	8	202-0005	1/2”-13 Hex Nut, ZP
6	8	203-0012	1/2” Lock Washer, ZP
7	4	229-0843	3.77 Eff. Clevis Pin
8	4	229-0844	Hairpin Cotter Pin

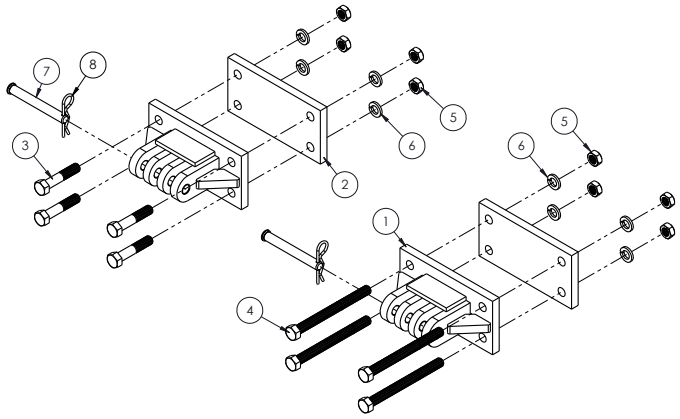

Installation Instructions

1. Read the General Instruction Sheet included with this package.

2. Most vehicle bumpers are NOT suitable for towing without modification and reinforcement. These brackets should never be attached over rubber or plastic. The mounting brackets should be attached metal to metal and to a flat surface. The bumper and the bumper bracket may need to be reinforced. If you are not sure, consult a skilled hitch mechanic.

3. Locate the center of your bumper and measure out 10-9/16” to either side. From the center of that mark measure over 21-1/8” to the opposite side. Using the inside holes of the adapter plate as a template, drill 17/32” holes at the marked points.

4. Attach the adapter to the bumper using the inside bracket holes and the holes drilled in step 3.

5. Drill 17/32” holes in the bumper for the outer bracket holes, using the bracket as a template.

6. Finish installing the brackets. NOTE: IF THE BUMPER SHOULD HAVE A TUBE BEHIND IT, DRILL THROUGH BOTH AND USE THE LONGER BOLTS PROVIDED. IF USING AN “A” FRAME TOW BAR, CHECK THAT IT MOVES FREELY UP AND DOWN BEFORE FINAL TIGHTENING. **BE SURE TO USE LOCTITE® ON ALL BOLTS BEFORE TIGHTENING. TORQUE ALL BOLTS ACCORDING TO TORQUE CHART IN GENERAL INSTRUCTION SHEET.**

7. Install the tow bar and safety cables according to the instructions included in their packages.

8. Do not substitute other devices if the pin and clip are lost.

9. **DEALER OR INSTALLER:** BE CERTAIN THE END USER RECEIVES THE INSTRUCTION SHEET.

© 2012 Blue Ox
One Mill Road, Industrial Park
Pender, Nebraska 68047
Phone: (402) 385-3051
Fax: (402) 385-3360
www.blueox.com