BILL OF MATERIALS			
DET. #	PART #	REQ'D	DESCRIPTION
1	PLUG-2.50x2.50	1	14 GA. TUBING PLUG
2	T10A-10.50	1	SERIES #10A TORSION TUBING
3	AB-090-04	1	RUBBER TORSION AXLE BRACKET
4	RC10-09.00	4	.833 DIA. RUBBER CORD
5	INB-100A	1	INTERNAL NYLON BUSHING
6	PBP4	1	PAINT BLACK PRIMER FOR AXLES
7	RTS	1	RUBBER TORSION STICKER
8	IA-1350-01-45	1	INNERMETAL ASSEMBLY
9	SN-1000	1	1"-14 SPINDLE NUT
10	SCP-103	1	5/32 COTTER PIN
11	AT-100	1	AXLE SERIAL TAG

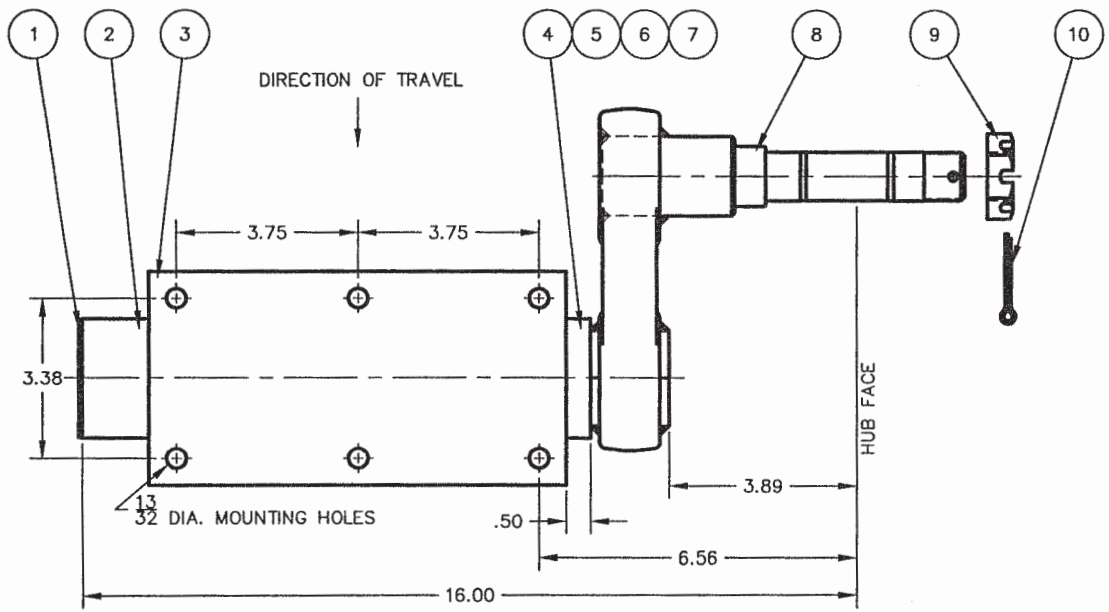

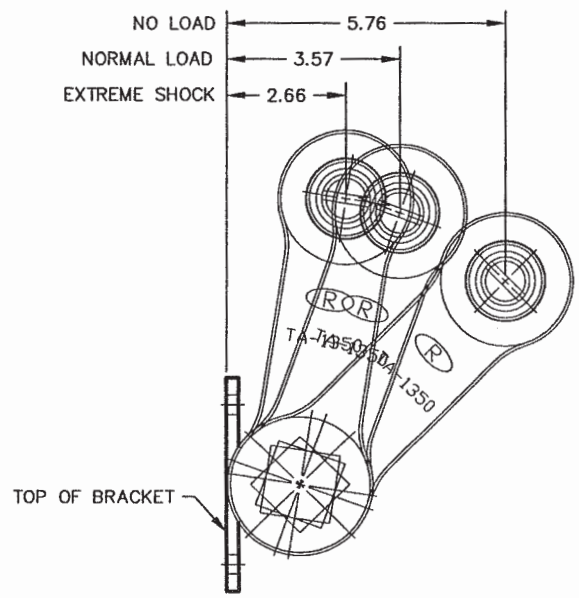

45° BELOW
STARTING ANGLE

CAPACITY – 1000 LBS. PER STUB
LH SHOWN – RH OPPOSITE

REVISIONS			TOLERANCES UNLESS NOTED			MAT'L	
REV. #	ECN #	DATE INIT.	DECIMAL ±.25	FRACTIONAL	ANGULAR ±3°	ITEM	SPECIFICATION
1			LOCATION 3		DIST. CODE 2	RELIABLE TOOL & MACHINE, CO. KENDALLVILLE, INDIANA 46755	
2			DATE 12/13/96		P. CODE RTA10A		
3			DRAWN BY C.W.		SCALE 1/2		
4			APPROVED BY		STATUS CODE 4	DRAWING TITLE SERIES #10A TORSION STUB	
5			THIS DRAWING MAY NOT BE REPRODUCED IN PART OR IN FULL WITHOUT WRITTEN PERMISSION FROM RELIABLE TOOL & MACHINE			C	DRAWING # RTS-1000-07-LH/08-RH